MECOA

23 CHANNEL
CITIZENS BAND MOBILE
TRANSCEIVER
MODEL BCB-6

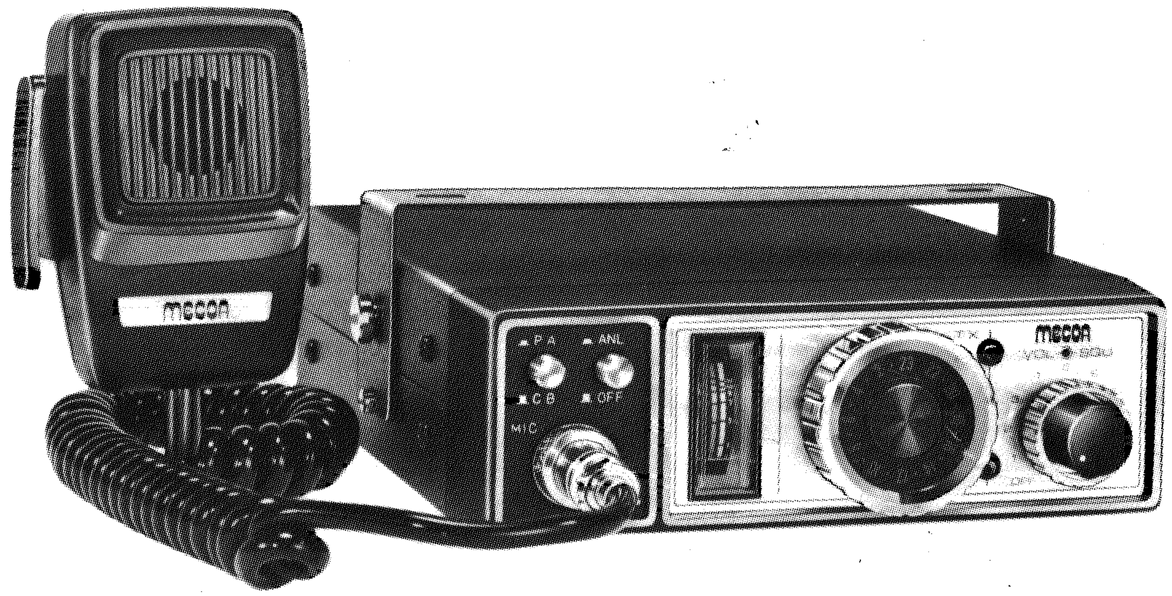

OPERATING INSTRUCTION MANUAL

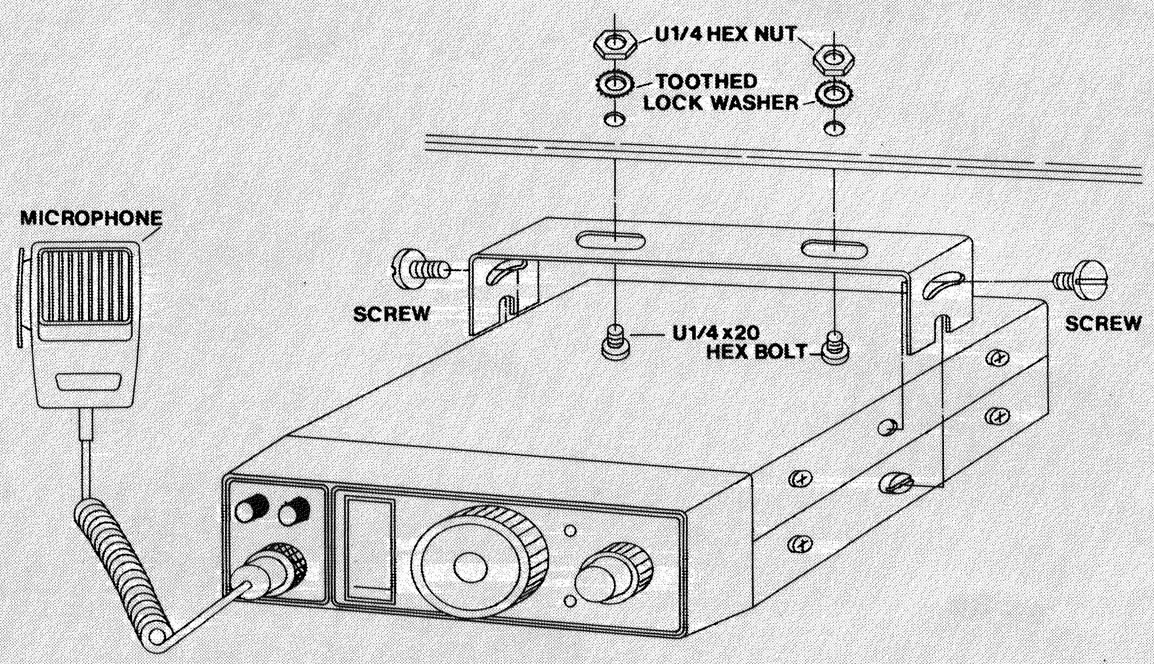

(Fig. 1)

DESCRIPTION

This unit is a fully Solid-State 23 Channel Citizens Band Transceiver to be used as a Class D station in the Citizens Radio Service.
Your transceiver has the following features :

* Sensitive dual conversion circuit with crystals supplied for 23-channel reception
* Precision controlled oscillator circuit with all 23 Citizens Band channels built into the unit.
* Large lighted S /RF meter providing a constant visual monitor of incoming "Signal Strenght" and transmitter "Relative Output Power"
* Automatic noise limiter circuit (ANL) to assure interference free reception.
* Public Address System.

TRANSCEIVER INSTALLATION (Fig. 1)

INSTALLATION

Select a mounting location which is in a convenient position for the driver and operator. A mounting yoke is furnished for under-dash mounting. This transceiver is designed to operate on a 12V DC (13.8V DC EIA) negative or positive grounding system. (Floating Ground System)
Connect the black wire to the negative side of the power source and the red wire to the ignition switch. With this method the unit will only operate when your key is turned on thus preventing unauthorized persons from operating your Transceiver.

GENERAL INFORMATION

SERVICING

A. It is the user's responsibility to see that this unit is operating at all times in accordance with the F. C. C. Citizens Radio Service regulations.

If you install your own transceiver, do not attempt to make any transmitter tuning adjustments. Adjustments are prohibited by the F.C.C. unless you hold or are in the presence and under the supervision of a first or second class radio telephone licensed person. A Citizen Band or Amateur License is not sufficient.

B. Only crystals, tubes or other components that will not cause violations of the technical regulations of Part 95 and type acceptance requirements of Part 2, Chapter 1 of the F.C.C. Rules and Regulations can be used for substitution or replacement of parts.

LICENSING

Before filing a formal application for a station license, you must read the sections covering Class D Citizens radio stations in Part 95 of the F. C. C. Rules and Regulations. To obtain a station license, complete FCC Form 505, "Application For Class C or D Station License In The Citizens Radio Service" and forward, along with filing fee, to The Secretary, Federal Communications Commission, Washington, D. C. 20554. Should you require advice and or assistance your dealer will be glad to help you. Remember, do not operate the transmitter until you receive your station License.

OPERATION (Fig. 2)

To Receive

1. Turn the set on with the ON-OFF Volume Control.
2. Rotate the SQUELCH control fully counter-clockwise.
3. Set the Channel Selector to the desired channel.
4. Advance the Volume Control background noise is heard from the speaker.
5. Turn the ANL Switch (Automatic Noise Limiter) to the "ON" position if you encounter excessive noise from electrical or atmospheric conditions.
6. The SQUELCH control should be adjusted clockwise to the the point where the receiver's background noise is muted or squelched. The receiver will be muted until another station's transmitter "breaks" the squelch.
   Do not advance the control too far clockwise or a weak signal will not "trip" the squelch.
7. By pushing the PA button your transceiver is converted to a public address system. A convenient P.A. speaker jack is provided on the back panel for connection to any standard 8-ohm PA speaker.
8. An external speaker jack is also provided on the back panel for your convenience.

To Transmit

Wait until the channel is clear. This is not only common courtesy but is required by F.C.C. regulations so you will not interfere with a conversation already in progress on the same channel. If the channel is clear, depress the microphone button and speak in a normal tone of voice with the "mike" held about 2 to 3 inches from the face.

Actual receive and transmitter power should be monitored by watching the Signal/RF-Meter needle moving as you transmit. This indicates you are actually transmitting. The meter light also turns red to indicate transmit mode and varies in intensity to indicate modulation.

When finished speaking, release the microphone button to receive.

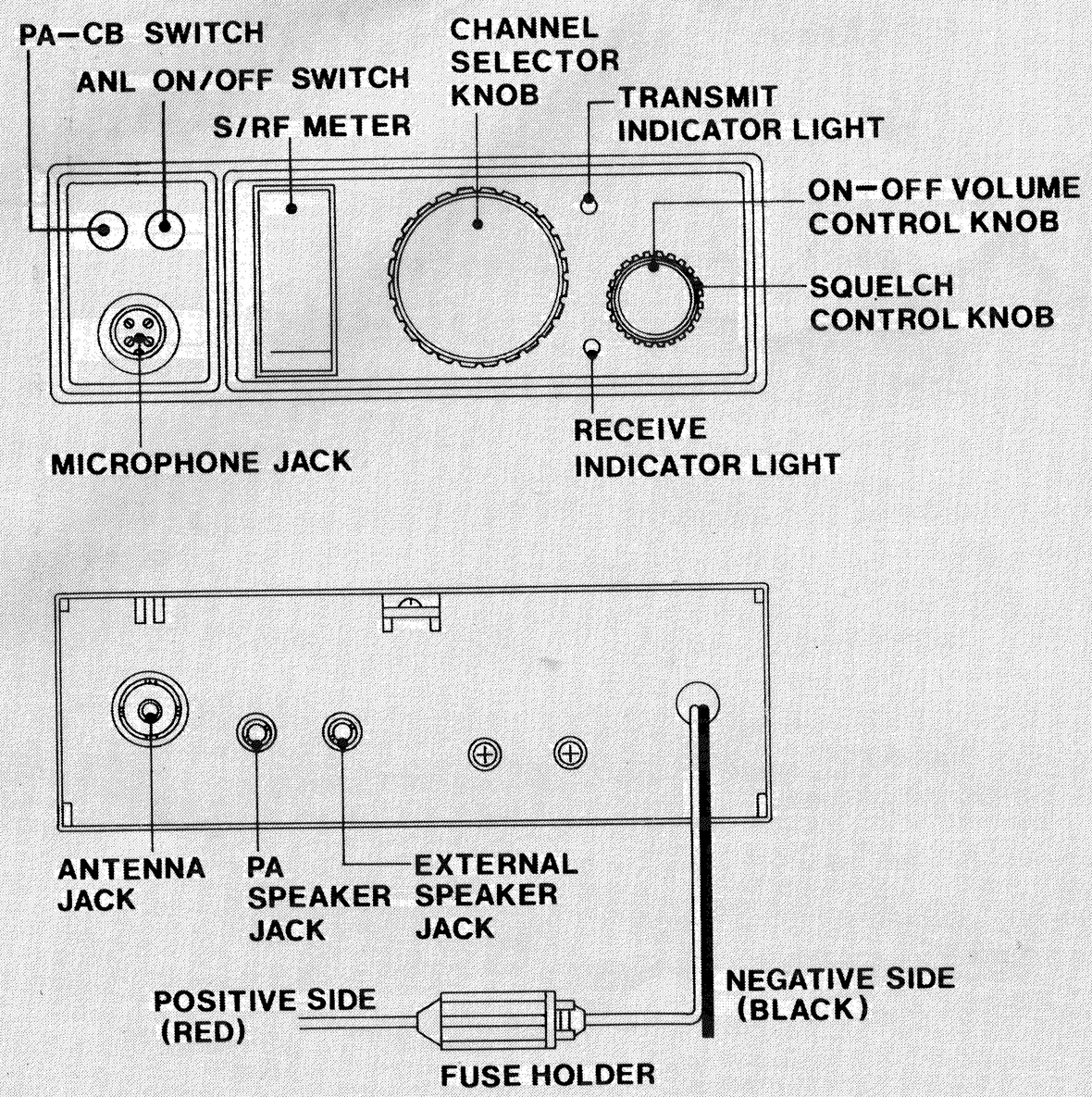

(Fig. 2)

SCHEMATIC DIAGRAM

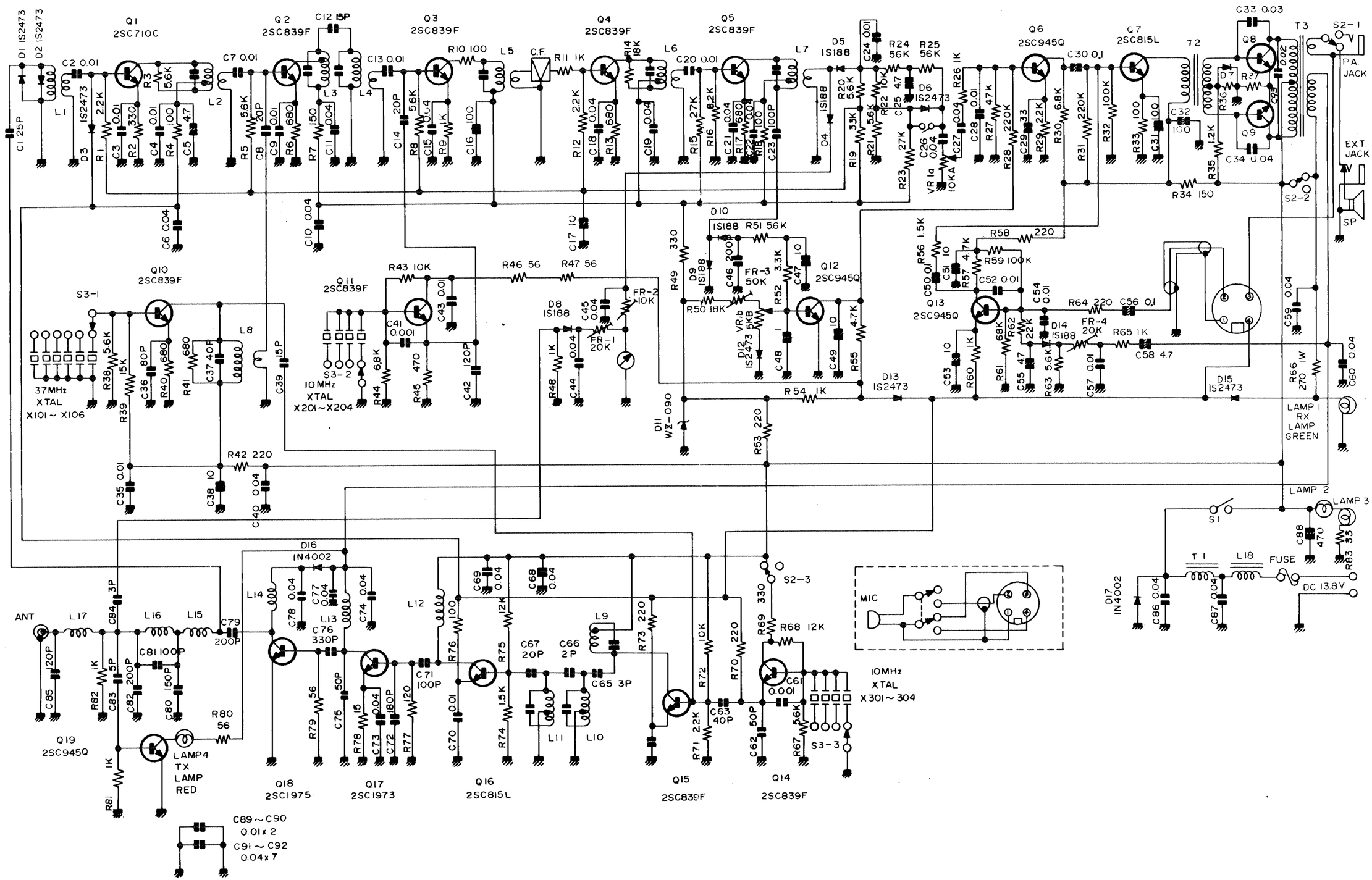

SPECIFICATION :

GENERAL

Channels:	23
Frequency Range :	26.965 to 27.255 MHz
Frequency Control :	Synthesizer
Frequency Tolerance :	±0.005%
Operating Temperature Range :	−10°C to +50°C
Power Requirements :	DC 13.8V nominal
Microphone :	Dynamic
Dimensions / Weight :	6″ × 8″ × 2″ (150mm × 200mm × 55mm) 3.5 lbs (1.6 kg)

TRANSMITTER SECTION

Power Output :	3.5W
Modulation :	(82 ~ 100%)
Output Impedance :	50 ohm
Harmonic and Spurious Emissions :	50 dB or LESS

RECEIVER SECTION

Sensitivity :	Less than 0.7 μV for 10 dB S/N
Selectivity :	6dB at 4 kHz, 30dB at 11kHz, 60 dB at 40 kHz
Audio Output :	More than 3W / 10% distortion

PRINTED IN JAPAN